DUO 30

Load values

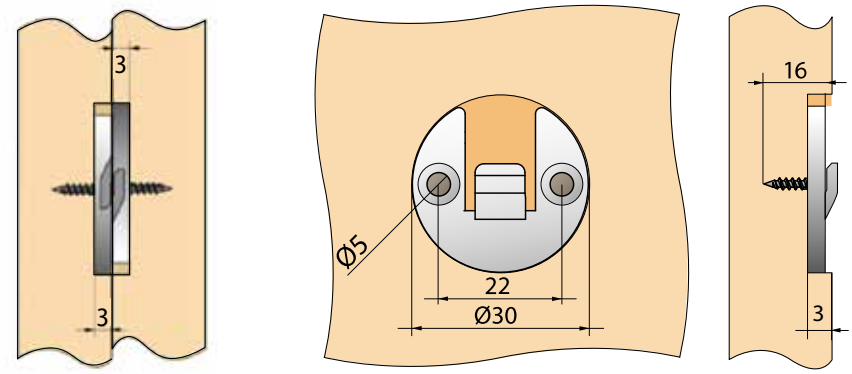

DUO 30

Material thickness d	Wood panel type	Admissible load F	
19 mm	Coated particleboard	0,79 kN	~ 81 kg
16 mm	MDF board	0,67 kN	~ 68 kg

The admissible load values F in the insertion direction were determined during internal testing.
DUO 30 was installed with two 3x12 mm countersunk wood screws.
The permissible values indicated offer three times the safety margin compared to the average resistance!
KNAPP GmbH accepts no liability for the admissible load values indicated.

28.01.2026 | KNAPP® Load values DUO 30 | © The KNAPP® logo is a registered trademark of the trademarkowner Knapp GmbH, A-3324 Euratsfeld. Irrtümer und Änderungen vorbehalten.

Knapp GmbH | Wassergasse 31 | A-3324 Euratsfeld | Tel.: +43 (0)7474 / 799 10 | Fax: +43 (0)7474 / 799 10 99
Knapp GmbH | Vertrieb Deutschland | Föhrenweg 1 | D-85591 Vaterstetten
Tel.: +49 (0)8106 / 99 55 99 0 | E-Mail: info@knapp-verbinder.com | www.knapp-verbinder.com